Parts Catalog



SP60

Mixer

Model: SP60

04/08/2026 Rev C
IMPORTANT!
TO EXPEDITE SHIPMENT OF PARTS, ALWAYS SPECIFY MODEL, REV, PART NUMBER, AND SERIAL NUMBER OF UNIT.

GLOBE FOOD EQUIPMENT COMPANY

2215 East River Road
Dayton, Ohio 45439

Parts Department
Toll Free 1-800-745-6238
E-Mail: info@globefoodequip.com
Website: www.globefoodequip.com

Not for resale

© Globe Food Equipment Company, 2026

Table of Contents

Description	Page
SP60 Base Components	4
SP60 Head Components	8
SP60 Hub Components	10
SP60 Planetary Components	12
SP60 Gearbox Components	14
SP60 Motor Components	18
SP60 Manual and Digital Components	20
SP60 Bowl Scraper Components	22
SP60 220V Single Phase Electrical Diagram	24
SP60 208V Three Phase Electrical Diagram	25
SP60 220V Single Phase Wiring Diagram	26
SP60 208V Three Phase Wiring Diagram	27
SP60 208V Three Phase Wiring Diagram	28

SP60 Base Components

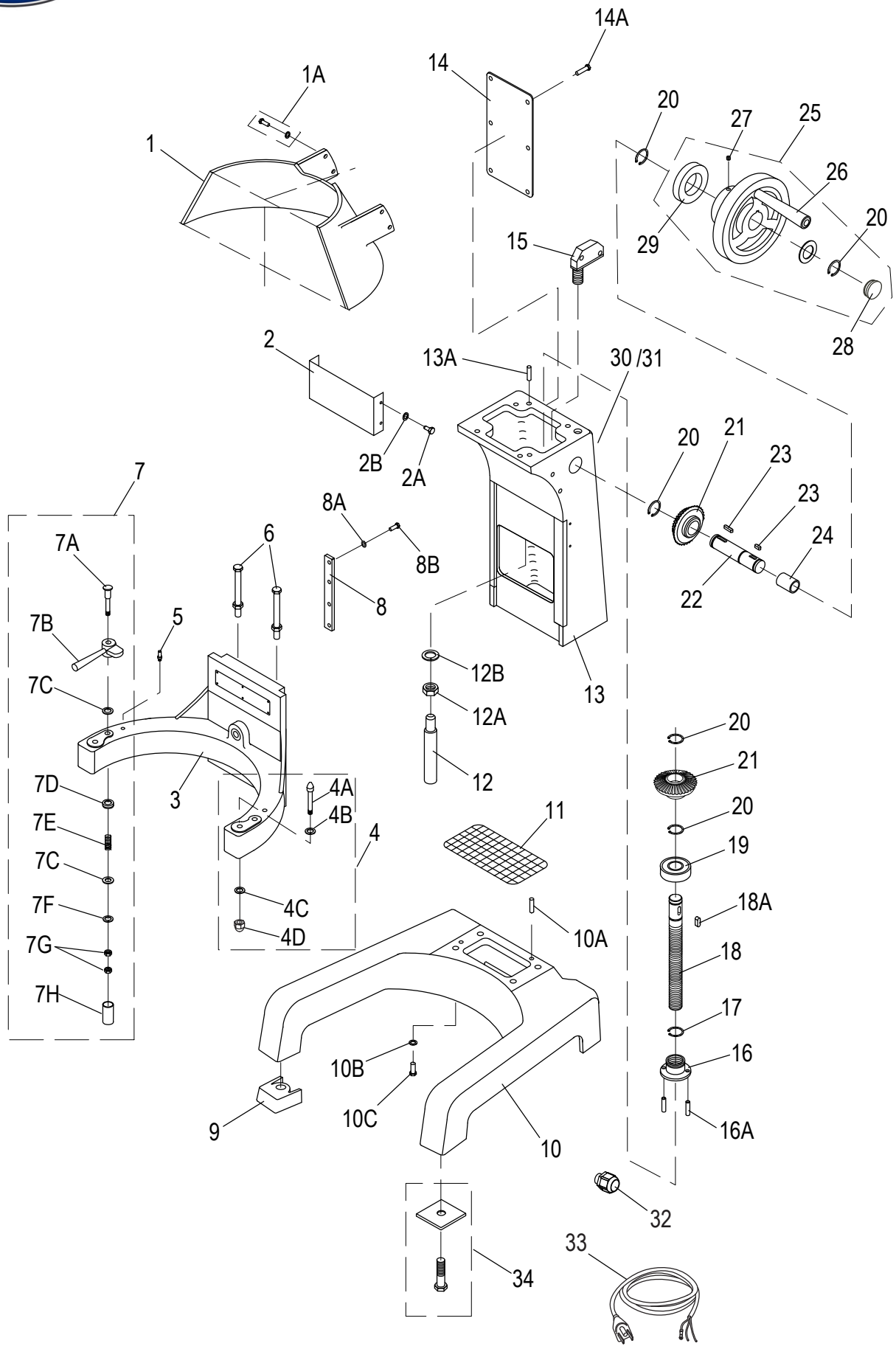

© Globe Food Equipment Company

SP60 Base Components

Item	Part Number	Description	Qty	Serial Number
1	X60036	Rear Guard	1	
1A	X30101	Screw & Washer Kit	4	
2	X40102	Cover	1	
2A	X40056	Truss Hd Screw PHH M6-1.0x10mm, SS-18	4	
2B		Washer M6 Flat	3	
3	X60034	Bowl Cradle	1	
4	X60109	Dowel Screw Kit (Incls. items 4A-4D)	2	
4A		Dowel Screw	2	
4B		Washer M12xOD30x1.0mm	2	
4C	X01372	Lock Washer,SS M12, OD-21mm, TH-2.5mm	2	
4D	X40110	Acorn Nut, Zn, M12-1.75, OD-19mm, TH-22mm	2	
5	X30167	Stop Pin	2	
6	X40106	Screw M10x54mm Hex Hd/Nut (Touch Shaft)	2	
7	X01086	Bowl Clamp Kit (2/Set)	1	
7A	X60108	Hardware Kit	2	
7B	X30033-2	Bowl Clamp (2/Set)	1	
7C	X02617	Flat Washer, SS M12,OD-29mm, Th-1mm	4	
7D		Hardware Cap Retainer	2	
7E		Spring	2	
7F	X01372	Lock Washer,SS M12, OD-21mm, TH-2.5mm	2	
7G	X30215	Hex Nut M12-1.75, Zn, OD-19mm, TH-10mm	4	
7H		Hardware Cap	2	
8	X40035	Slide Guide	2	
8A	X08101	Flat Washer, Zinc M8, OD-16mm,TH-1.5mm	8	
8B	X30197	Ext. Hex Hd Screw SS, M8-1.25x25mm	8	
9	X40162-163	Foot Kit (4/Set)	1	
10	X40038-DG	Base	1	
10A	X40040	Dowel Pin, SS, OD-8mm, L-29mm	2	
10B		Washer M12 Flat	4	
10C		Screw M12x40mm Hex Hd	4	
11	X40037	Screen	1	
12	X60218	Shaft	1	
12A	X60219	Thin Hex Nut, Zn, 5/8"-11, OD-15/16", TH-3/8"	1	
12B	X60221	Lock Washer M16	1	
13	X60042	Mixer Column	1	
13A	X40040	Dowel Pin, SS, OD-8mm, L-29mm	2	
14	X40055	Back Plate	1	
14A	X40056	Truss Hd Screw PHH M6-1.0x10mm, SS-18	8	
15	X30051	Microswitch	1	
16	X30104	Screw Sleeve	1	
16A	X30105	Slotted Sping Pin, B.O. OD-4mm, L-30mm, TH-1mm	2	
17	X25145	Int. Retaining Ring, B.O. ID-36mm, OD-40mm, TH-1.5mm	1	
18	X40041	Lift Screw	1	
18A	X20123	Round End Key H-5mm, W-5mm, L-18mm	1	
19	X30043	Bearing (6005LU)	1	
20	X30044	Ext. Retaining Ring, B.O. ID--23mm, OD-25mm, TH-1mm	5	
21	X30045	Oblique Gear (30T)	2	
22	X40047	Shaft	1	
23	X40073	Round End Key, H-5mm, W-5mm, L-20mm	2	
24	X40050	Bearing Kit	1	
25	X40053	Hand Wheel Crank With Handle, Plastic	1	
25	X40053M	Hand Wheel Kit	1	
26	X30053-1	Handle Kit	1	

© Globe Food Equipment Company

SP60 Base Components

Item	Part Number	Description	Qty	Serial Number
27		Set Screw M10x8mm Cup Pt.	1	
28		Hand Wheel Cap	1	
29		Spacer (50m mod x 25.3mm Id x 10.2mm)	1	
30	X91014	Hazardous Voltage Label (Not Shown)	1	
31	X91011	3 Phase Caution Label (3 Phase Units, Not Shown)	1	
32	X03108	Strain Relief	1	
33	X02741	Power Cord (3PH)	1	
33	X02741	Power Cord (3PH)	1	
33	X01499	Power Cord (1PH) (Not Shown)	1	
33	X00667	Power Cord (480V) (Not Shown)	1	
34	X30039	Bolt & Washer Kit (For Shipping)	4	

© Globe Food Equipment Company

INTENTIONALLY LEFT BLANK PAGE

© Globe Food Equipment Company

SP60 Head Components

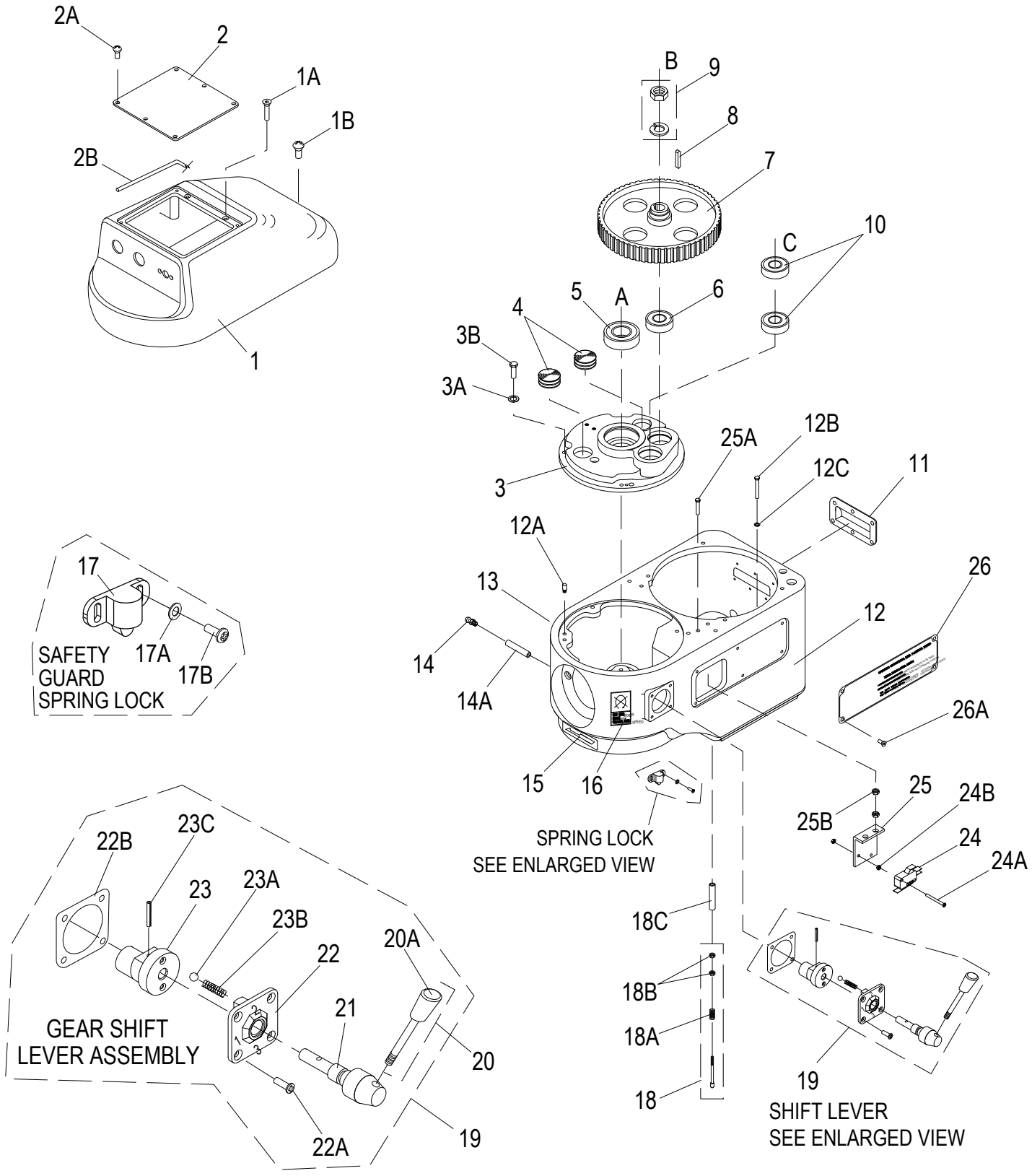

© Globe Food Equipment Company

SP60 Head Components

Item	Part Number	Description	Qty	Serial Number
1	X40004-DG	Top Cover	1	
1A	X30207	Flat Hd Screw-Socket M8-1.25x108mm, B.O.	2	
1B	X30220	Flat Hd Screw-Socket M6-1.0x90mm, B.O.	1	
2	X40002	Cover	1	
2A	X40056	Truss Hd Screw PHH M6-1.0x10mm, SS-18	6	
2B	X40003	Gasket	1	
3	X60077	Transmission Case Cover	1	
3A	X30198	Lock Washer M8, OD-13mm, TH-2mm	4	
3B	X30197	Ext. Hex Hd Screw SS, M8-1.25x25mm	4	
4	X10073	Oil Plug	2	
5	X80F10	Bearing (6207LU)	1	
6	X10102	Bearing (6205LU)	1	
7	X60080	Gear Wheel (97T)	1	
8	X40081	Round End Key H-6xW-6xL-35mm	1	
9	X40082	Thin Hex Nut M18-1.5, OD-27, Thick-9mm, CLASS 04, Zn	1	
10	X30043	Bearing (6005LU)	2	
11	X30076	Screen Plate	1	
12	X60087	Transmission Case, Fixed Bowl Guard.	1	->7610884 or 7650835
12	X60087-1	Transmission Case	1	7610883 or 7650834 ->
12A		Dowel Pin, Cover Locating	2	
13	X91009	Gear Maintenance Label	1	
14	X10900	Grease Fitting	1	
14A	X10217	Grease Tube w/o Zert	1	
15	X91012	Arrow Label	1	
16	X91010	Gear Damage Label	1	
17	X10134	Spring Lock Assembly	1	
17A	X10134A	Lock Washer, SS M3, OD-6mm, TH-1mm	2	
17B	X10134B	Round Hd Screw-PHH M3-0.5x8mm, SS	2	
18	X40096	Touch Shaft Assy, Brass	1	
18	X30096N	Nylon Touch Shaft Kit	1	
18A	X30095	Spring	1	
18B	X30186	Hex Nut, Zinc M5-0.8 OD-8, TH-4mm	2	
18C	X40187	Support Tube	1	
19	X40057-60	Gear Shift Lever Assembly	1	
20	X40057	Lever With Knob	1	
20A	X30057-1	Knob	1	
21		Shaft	1	
22		Cover	1	
22A	X30179	Flat Hd Screw,Hex M6-1.0x16mm	4	
22B	X30059-1	Gasket	1	
23		Shaft Bias	1	
23A		Ball Bearing	2	
23B		Spring	2	
23C		Roll Pin Ø5x28mm	1	
24	X10057	Microswitch	1	
24A	854-2	Screw	2	
24B	854-3	Nut	4	
25	X30062	Bracket	1	
25A	X80J16	Ext. Hex Hd Screw M6x1.0x20 mm SS	2	
25B	X08015	Lock Nut, Zinc M6-1.0, OD-10mm, TH-6mm	4	
26	X30066	Injury Warning Plate	1	
26A	X30065	Truss Hd Screw-Phillips M5-0.8x10mm, SS	4	

© Globe Food Equipment Company

SP60 Hub Assembly Components

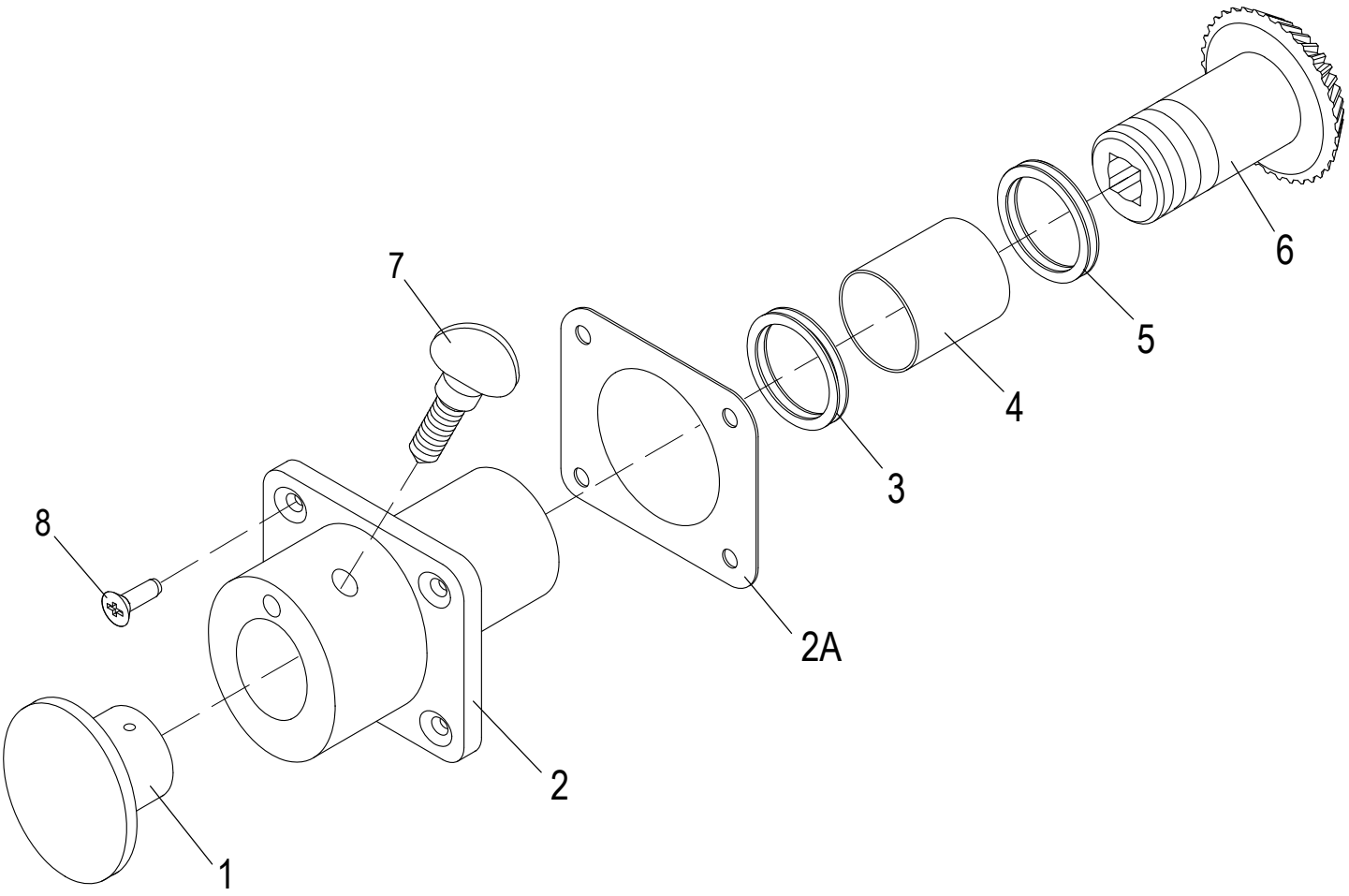

© Globe Food Equipment Company

SP60 Hub Assembly Components

Item	Part Number	Description	Qty	Serial Number
1	X10007	Hub Plug	1	
2	X40017-DG	Hub Assembly	1	
2A	X80B48	Gasket	1	
3	X10089	Oil Seal ID-35mm, OD-45mm, TH-8mm	1	
4	X10075	Needle Bearing	1	
5	X30018-1	Flat Washer, Zinc ID-35mm, OD-55mm, TH-1mm	2	
6	X40014	Level Gear (35T)	1	
7	X10005	Thumb Screw (TS 1/2"-#12)	1	
8	X80B52	Cap Hd Screw, Hex, B.O., M6-1.0X20mm	4	

© Globe Food Equipment Company

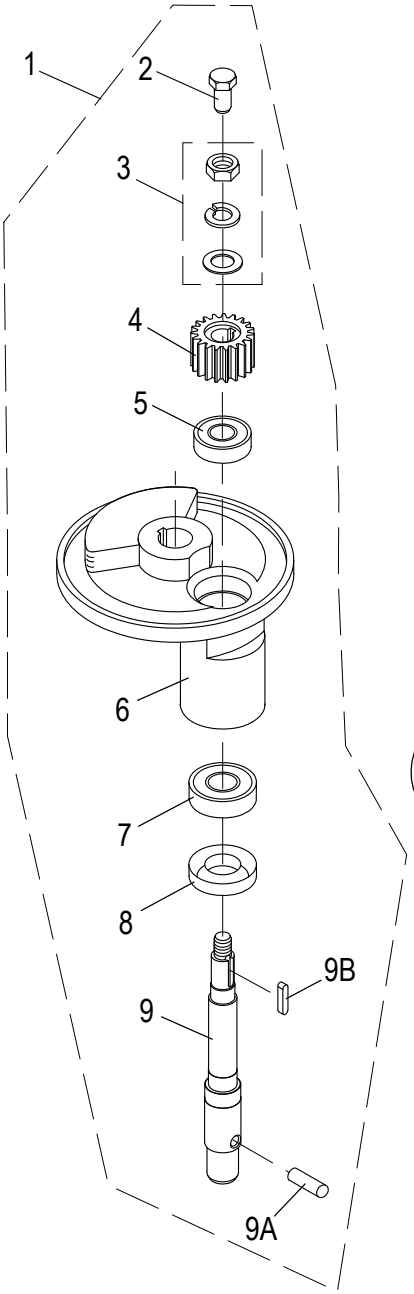

Removable Bowl Guard
after S/N 7610883
or S/N 7650834

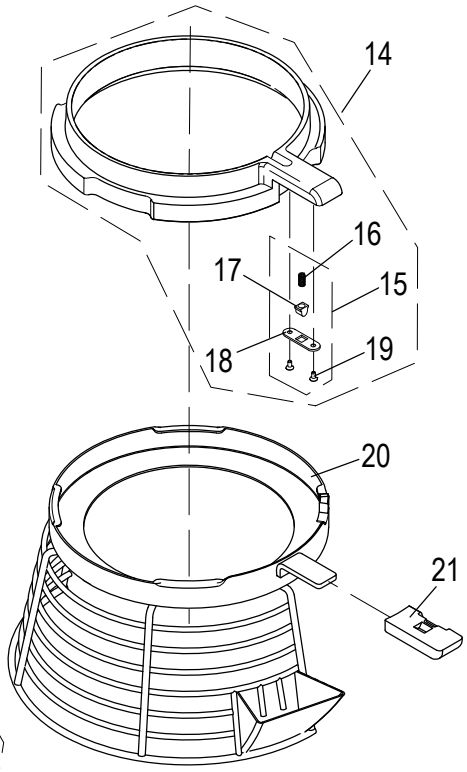

Fixed Bowl Guard
before S/N 7610884
or S/N 7650835

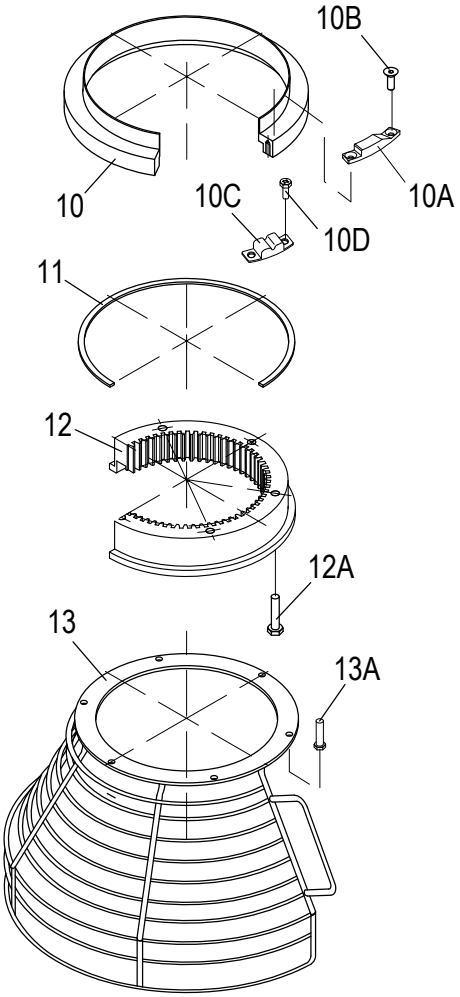

© Globe Food Equipment Company

SP60 Planetary Components

Item	Part Number	Description	Qty	Serial Number
1	X60019-28	Planetary Assembly	1	
2	X60019	Screw, Hex Hd (Old Style Shaft)	1	
3	X30020	Washer & Nut Kit	1	
4	X60021	Pinion, Gear (21T)	1	
5	X60022	Bearing Kit (2/Set) (6006Z & 6006LU)	1	
6	X60023-DG	Planetary Holder	0	7611145 or 7651161 ->
7	X60024	Bearing (6208LU-X)	1	
8	X60025	Oil Seal	1	
9	X60027	Planetary Shaft, External Thread (New Style)	1	
9		Planetary Shaft, Internal Thread (Old Style)	1	
9A	X60028	Dowel Pin	1	
9B	X40026	Round End Key H-7mm, W-7mm, L-23mm	1	
10	X60090	Slide Sheath	1	->7610884 or 7650835
10A	X10041	Touch Mass	2	
10B	X10042	Flat Hd Screw-Phillips M4-0.7x10mm, Zn	2	->7610884 or 7650835
10C		Safety Guard Spring Lock	1	->7610884 or 7650835
10D		Screw M4x9mm Hex Hd - SS	2	->7610884 or 7650835
11	X40091	Mat	1	->7610884 or 7650835
12	X60092	Ring Gear (67T)	1	->7610884 or 7650835
12A	X30099	Cap Hd Screw, Hex, B. O., M8-1.25x35mm	6	->7610884 or 7650835
13	X60093-94	Front Interlocking Guard Assy	1	->7610884 or 7650835
13A	X10083	External Hex Hd Screw, SS, M5-0.8X10mm	6	
14	X600S2	Slide Sheath	1	->7610884 or 7650835
15	X200S3	Spring Lock Kit	1	7610883 or 7650834 ->
16		Spring	1	7610883 or 7650834 ->
17		Plunger	1	7610883 or 7650834 ->
18		Plate, Plunger Retention	1	7610883 or 7650834 ->
19	X10134B	Round Hd Screw-PHH M3-0.5x8mm, SS	2	
20	X600S1	Removable Bowl Guard	1	7610883 or 7650834 ->
21	X30504	Plastic Handle	1	7610883 or 7650834 ->

© Globe Food Equipment Company

SP60 Gearbox Components

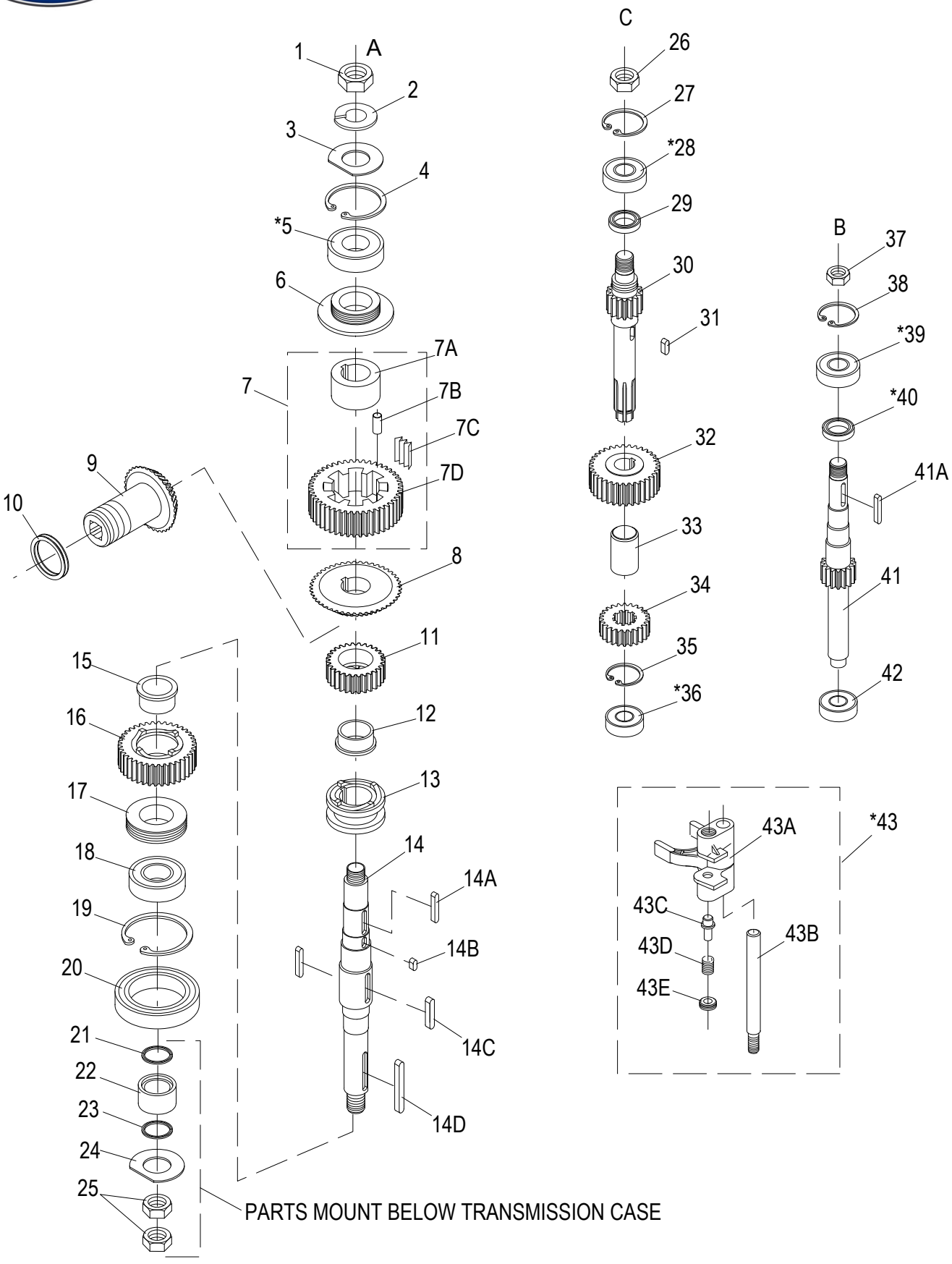

*PART CONFIGURATION MAY VARY.

© Globe Food Equipment Company

SP60 Gearbox Components

Item	Part Number	Description	Qty	Serial Number
1	X40111	Thin Hex Nut, Zn, M24-1.5, OD-35mm, TH-12mm	1	
2	X40111A	Lock Washer, B.O., M25, OD-40mm, TH-5mm	1	
3	X60111B	Flat Washer, SS, M25, OD-44mm, TH-5mm	1	
4	X80D14	Int. Retaining Ring, B.O. ID-2 11/16, OD-3", TH-0.09"	1	
5	X80F10	Bearing (6207LU)	1	7610183 or 7650103 ->
6	X60113	Lead-In Oil Pad	1	
7	X60114-117	Slow Speed Gear Assembly (52T)	1	
7A		Bushing	1	
7B		Dowel Ø8x16mm Pin	1	
7C		Slice Spring	1	
7D		Gear, Slow Speed (52T)	1	
8	X60118	Bevel Gear (52T)	1	
9	X40014	Level Gear (35T)	1	
10	X30018-1	Flat Washer, Zinc ID-35mm, OD-55mm, TH-1mm	1	
11	X60120	Gear, Clutch (36T) Old Style (Standard)	1	
11	X60209	Clutch Gear (34T)	1	7610183 or 7650103 ->
12	X60119	Bushing	1	
13	X60133	Clutch Sleeve	1	
14	X60130	Drive Shaft	1	
14A	X60121	Round End Key H-8mm, W-8mm, L-28mm	1	
14B	X60217	Round End Key H-8mm, W-8mm, L-15mm	1	
14C	X30132	Round End Key H-8mm, W-10mm, L-40mm	2	
14D	X30131	Round End Key H-10mm, W-10mm, L-55mm	1	
15	X60119	Bushing	1	
16	X60122	Clutch Gear (45T)	1	
17	X60124	Heel	1	
18	X60125	Bearing (6308LU)	1	
19	X60126	Ext. Retaining Ring, B.O., ID-3 1/4", OD-3.62", TH-0.11"	1	
20	X60128	Oil Seal	1	
21	X60208	O-Ring OD-50mm, TH-6mm	1	
22	X60127	Bushing	1	
23	X60208	O-Ring OD-50mm, TH-6mm	1	
24	X60129A	D-Shaped Flat Washer, Zn, M24, OD-60mm, TH-5mm	1	
25	X40111	Thin Hex Nut, Zn, M24-1.5, OD-35mm, TH-12mm	1	
26	X40082	Thin Hex Nut M18-1.5, OD-27, Thick-9mm, CLASS 04, Zn	1	
27	X20214	Int. Retaining Ring ID-2", OD-2.210", TH-0.062", B.O.	1	
28	X10102	Bearing (6205LU)	1	7610183 or 7650103 ->
29	X60214	Oil Seal	1	7610183 or 7650103 ->
30	USE X60150-2 & X40143-2	Transmission Shaft (13T) Old Style, Keyed	1	
30	X60150-2	Transmission Shaft (13T)	1	
31	X40149	Round End Key H-8xW-8xL-24mm	1	
32	X40148	Gear (29T) Old Style	1	
32	X40223	Gear (31T)	1	7610183 or 7650103 ->
33	X40144	Bushing	1	
34	X60143-1	Gear (20T) Old Style, Keyed	1	
34	X40143-2	Gear (20T) New Style, Splined	1	
35	X40141	Retaining Ring STW-24	1	
36	X60140	Bearing (6205)	1	7610183 or 7650103 ->
37	X40082	Thin Hex Nut M18-1.5, OD-27, Thick-9mm, CLASS 04, Zn	1	
38	X80D36	Int. Retaining Ring, B.O. ID-1 3/4", OD-2", TH-0.06"	1	
39	X30043	Bearing (6005LU)	2	7610183 or 7650103 ->
40	X60214	Oil Seal	1	7610183 or 7650103 ->
41	X60145	Master Shaft (15T) Old Style (Standard)	1	

© Globe Food Equipment Company

SP60 Gearbox Components

Item	Part Number	Description	Qty	Serial Number
41	X60210	Master Shaft (13T) New Style (Slow Speed)	1	7610183 or 7650103 ->
41A	X40081	Round End Key H-6xW-6xL-35mm	1	
42	X30140	Bearing (6204)	1	
43	X60134-139	Shifter Yoke Kit	1	
43A		Yoke Shifter	1	
43B		Guide, Rod Shifter	1	
43C		Plunger, Yoke Shifter	2	
43D		Spring, Yoke Shifter	2	
43E		Spring, Retainer	2	

© Globe Food Equipment Company

INTENTIONALLY LEFT BLANK PAGE

© Globe Food Equipment Company

SP60 Motor Components

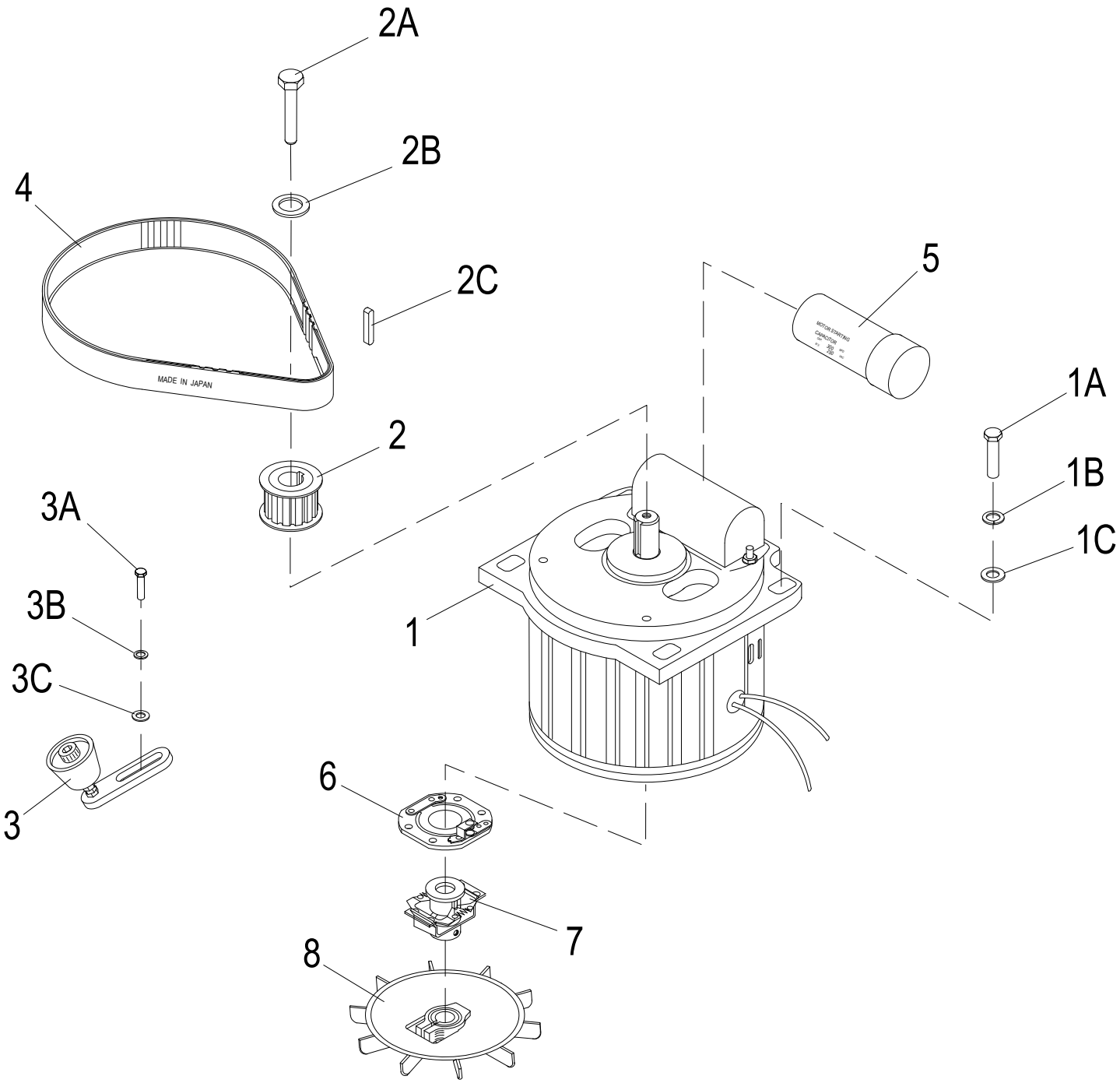

© Globe Food Equipment Company

SP60 Motor Components

Item	Part Number	Description	Qty	Serial Number
1	X60068-1	Motor (208V/60Hz/3Ph/9A) 3 Phase	1	
1	X60068-2	Motor (220V/60Hz/1Ph/23A) 1 Phase	1	
1	X60068-3	Motor (240V/60Hz/3Ph/9A)	1	
1	X60068-4	Motor (240V/60Hz/1Ph/23A)	1	
1	X60068-6	Motor (220V/50Hz/1Ph/23A)	1	
1	X60068-W	Motor (480V/60Hz/3Ph/9A)	1	
1	X60068-5	Motor (220V/50Hz/3Ph)	1	
1A	X40069	Screw M8x30mm Hex Hd	4	
1B	X08102	Lock Washer, Zinc M8, OD-15mm, TH-2mm	4	
1C	X08101	Flat Washer, Zinc M8, OD-16mm,TH-1.5mm	4	
2	X30071	Sprocket	1	
2	X00734	Sprocket (50HZ)	1	
2A	X30075	Ext. Hex Hd Screw M8-1.25x20mm, Zn	1	
2B	X30074	Flat Washer, Zinc M8, OD-25mm, TH-3mm	2	
2C	X30073	Round End Key H-5mm, W-5mm, L-25mm	1	
3	X30158	Belt Tensioner	1	
3A	X30197	Ext. Hex Hd Screw SS, M8-1.25x25mm	2	
3B	X08102	Lock Washer, Zinc M8, OD-15mm, TH-2mm	2	
3C	X08101	Flat Washer, Zinc M8, OD-16mm,TH-1.5mm	2	
4	X40072-1	Belt (60HZ)	1	
4	X40072-2	Belt (50Hz)	1	
5	X30070-1A	Start Capacitor (600MF)	1	
5	X60070-2	Run Capacitor (70Mf)	1	
6	X10051	Platinum Switch	1	
7	X40064	Clutch	1	
8	X40061	Fan	1	

© Globe Food Equipment Company

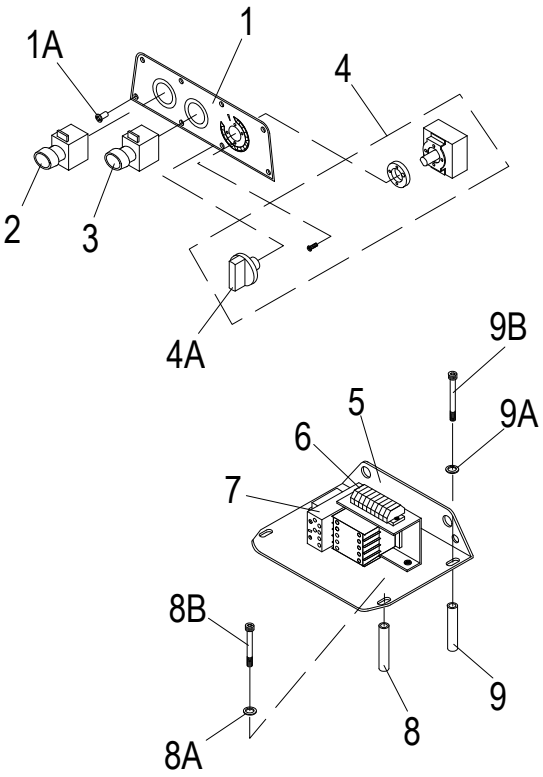

Manual Timer

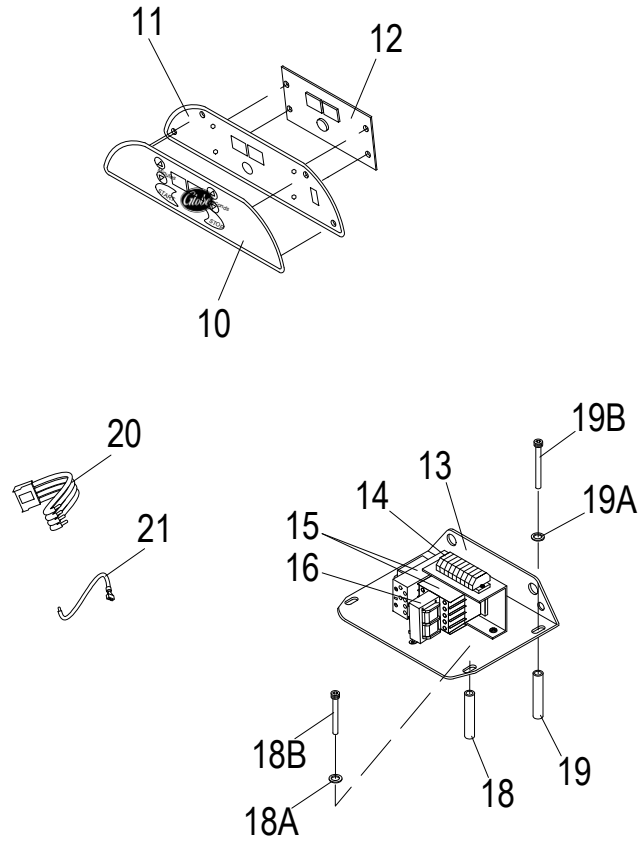

Digital Timer

© Globe Food Equipment Company

Item	Part Number	Description	Qty	Serial Number
1	X40005	Control Panel	1	
1A	X30204	Truss (Extra Wide) Hd Screw M4-0.7X10mm	8	
1B	X40009	Gasket (Not Shown)	1	
2	X10050	Emergency Stop Button	1	
3	X30007	Start Button	1	
3A	X30007-1	Boot, Start/Stop Switch Button (Not Shown)	2	
3B	X30007-1B	Light Bulb, Start Button (Not Shown)	1	
4	X10137	Timer Kit	1	
4A	X10137-1	Timer Knob	1	
5	X60013	Mounting Plate & Bracket	1	
6	X40012	Connecting Block Kit	1	
6	X40012-2G	Connecting Block, 2C Gry	7	
6	X40012-4R	Connecting Block, 4C Org	1	
6	X40012-EC	Connecting Block End Cap	1	
7	X30154P	Elec. Relay Kit (220-240V/50-60Hz/3Ph/18A)	1	
7	X60154-2	Electrical Relay Kit (220-240V/50-60Hz/1Ph/18A)	1	
8	X40153	Support Tube	2	
8A		Washer M8 Flat	2	
8B	X30086	Cap Hd Screw, Hex M8-1.25X100mm, B.O.(1/2Thread)	2	
9	X40085	Tube, Support - Rear (89mm)	2	
9A		Washer M8 Flat	2	
9B	X30010	Cap Hd Screw, Hex M8-1.25X90mm, B.O.(1/2 Thread	2	
10	X00567	Membrane	1	
11	X01338	Aluminum Panel Kit	1	
12	X00568	Control Board	1	
13	X30013	Mounting Plate & Bracket	1	
14		Connecting Block Set	1	
14	X10029-2G	Connecting Block Gray (2C)	7	
14	X10029-4R	Connecting Block Orange (4R)	1	
14	X30012-EC	Connecting Block End Cap	1	
15	X30154P	Elec. Relay Kit (220-240V/50-60Hz/3Ph/18A)	1	
15A	X30011PABB	Contactor (220-240V/50-60Hz/1-3Ph/18A)	1	
15B	X30154PABB	Relay (50-60Hz/14A)	1	
15	X60154-2	Electrical Relay Kit (220-240V/50-60Hz/1Ph/18A)	1	
15C	X60011-2ABB	Contactor (220-240V/50-60Hz/1-3Ph/18A)	1	
15D	X30154ABB	Relay (50-60Hz/19A)	1	
16	X00569	Transformer	1	
17	X00570	Fuse (250V/1A-Time Delay) (Not Shown)	1	
18	X40153	Support Tube	2	
18A	X10189	Flat Washer-Zinc M8, OD-12mm, TH-1mm	2	
18B	X30086	Cap Hd Screw, Hex M8-1.25X100mm, B.O.(1/2Thread)	2	
19	X40085	Tube, Support - Rear (89mm)	2	
19A	X10189	Flat Washer-Zinc M8, OD-12mm, TH-1mm	2	
19B	X30010	Cap Hd Screw, Hex M8-1.25X90mm, B.O.(1/2 Thread	2	
20	X00675-1	Wire Harness	1	
21	X00676	Control Board Wire	2	
22	X80J11	Terminal Block (Not Shown)	1	

© Globe Food Equipment Company

SP60 Bowl Scraper Components

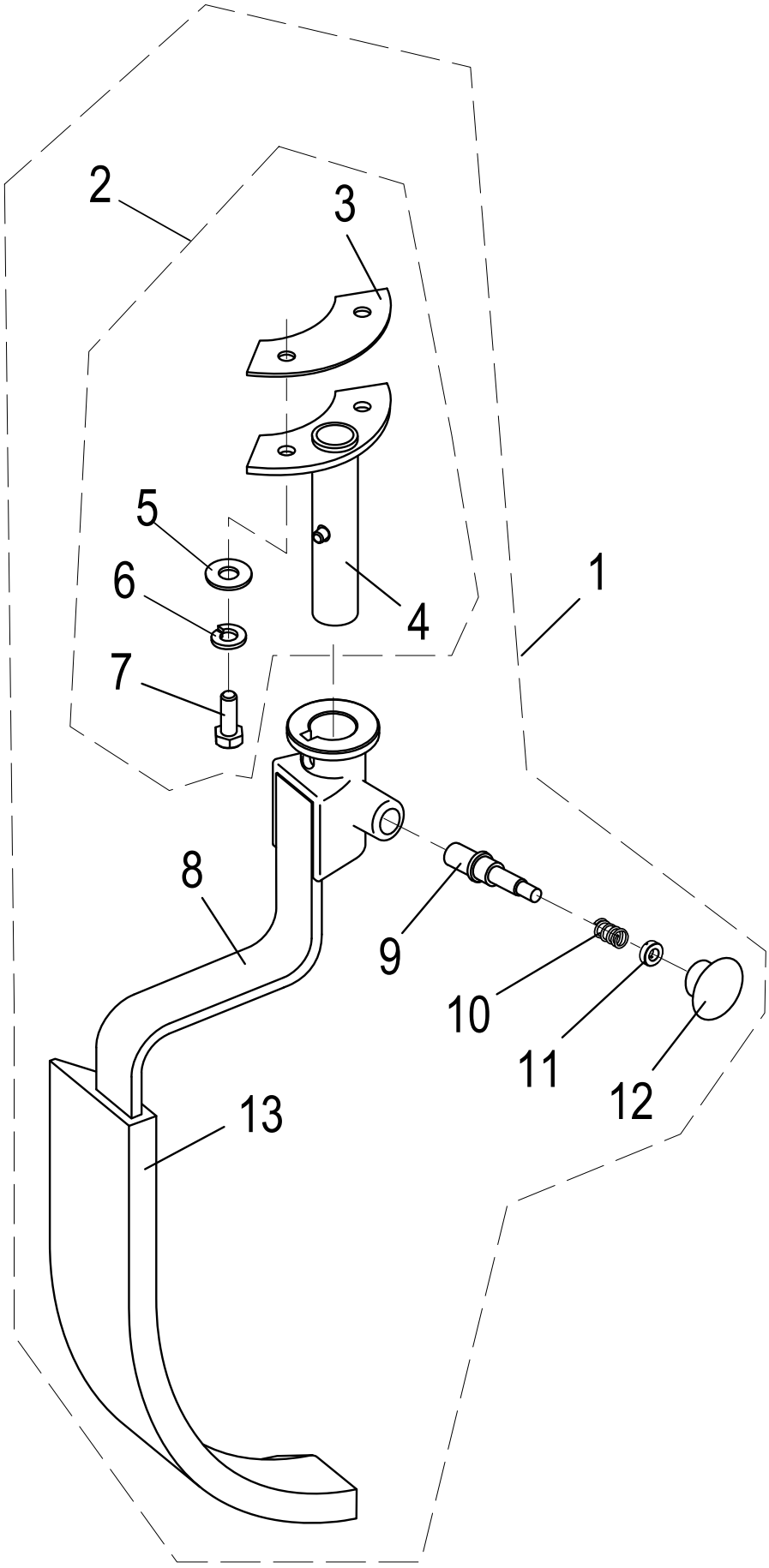

© Globe Food Equipment Company

SP60 Bowl Scraper Components

Item	Part Number	Description	Qty	Serial Number
1	XXSCRP-60	Bowl Scraper Assembly	1	
2	X02000	Mounting Kit	1	
3		Shaft Spacer	1	
4		Scraper Mounting Hub	1	
5		Scraper Arm	1	
6	X01759	Flat Washer M8, ID-8.4, OD-24, TH-2mm	1	
7	H00527	Split Lock Washer	1	
8	X30197	Ext. Hex Hd Screw SS, M8-1.25x25mm	1	
9	X80522	Pin	1	
10	X80523	Spring	1	
11	X80524	Spacer	1	
12	X80525	Knob	1	
13	X80526	Rubber Scraper	1	

© Globe Food Equipment Company

SP60 220V Single Phase Electrical Diagram

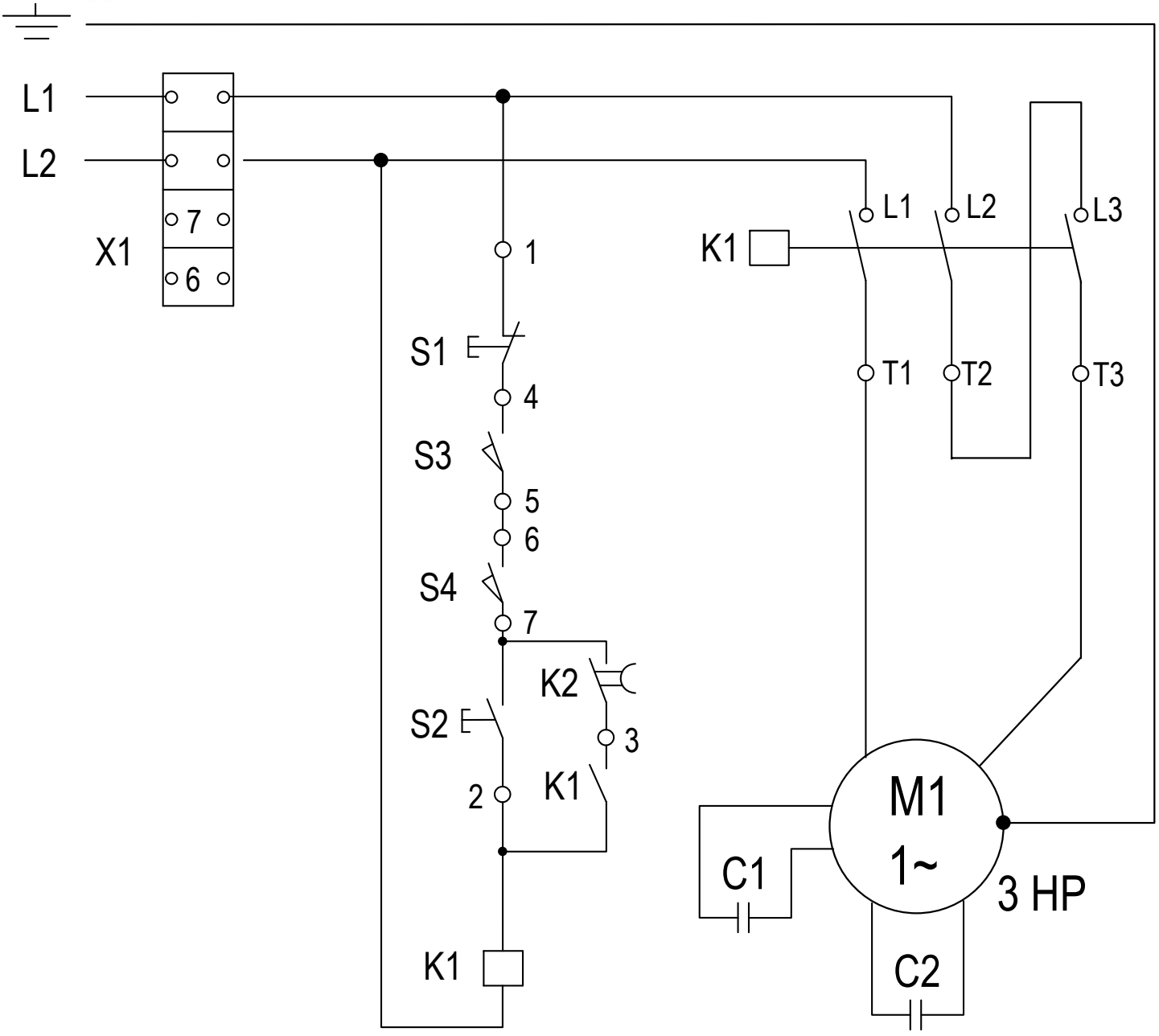

Item	Description	Qty
C1	Capacitor, Start	1
C2	Capacitor, Run	1
S1	Emergency Stop Button	1
S2	Start Button	1
S3	Microswitch (Bowl Lift)	1
S4	Microswitch (Interlock Guard)	1
K1	Contactor	1
K2	Timer	1
M1	Motor, 3HP Single Phase 220V	1

© Globe Food Equipment Company

SP60 208V Three Phase Electrical Diagram

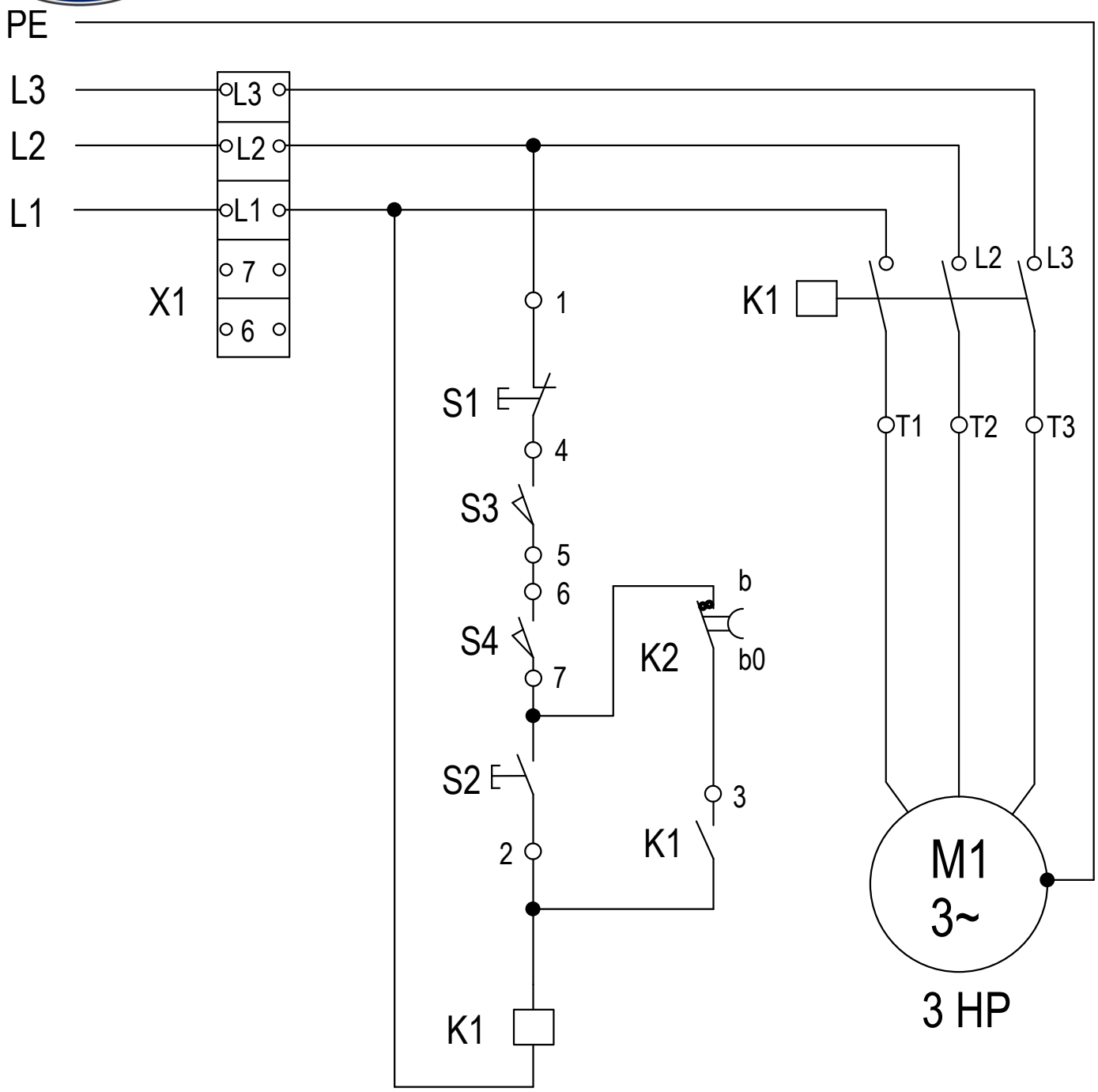

Item	Description	Qty
S1	Emergency Stop Button	1
S2	Start Button	1
S3	Microswitch (Bowl Lift)	1
S4	Microswitch (Interlock Guard)	1
K1	Contactor	1
K2	Timer	1
M1	Motor, 3HP Three Phase 208V	1

© Globe Food Equipment Company

SP60 220V Single Phase Wiring Diagram

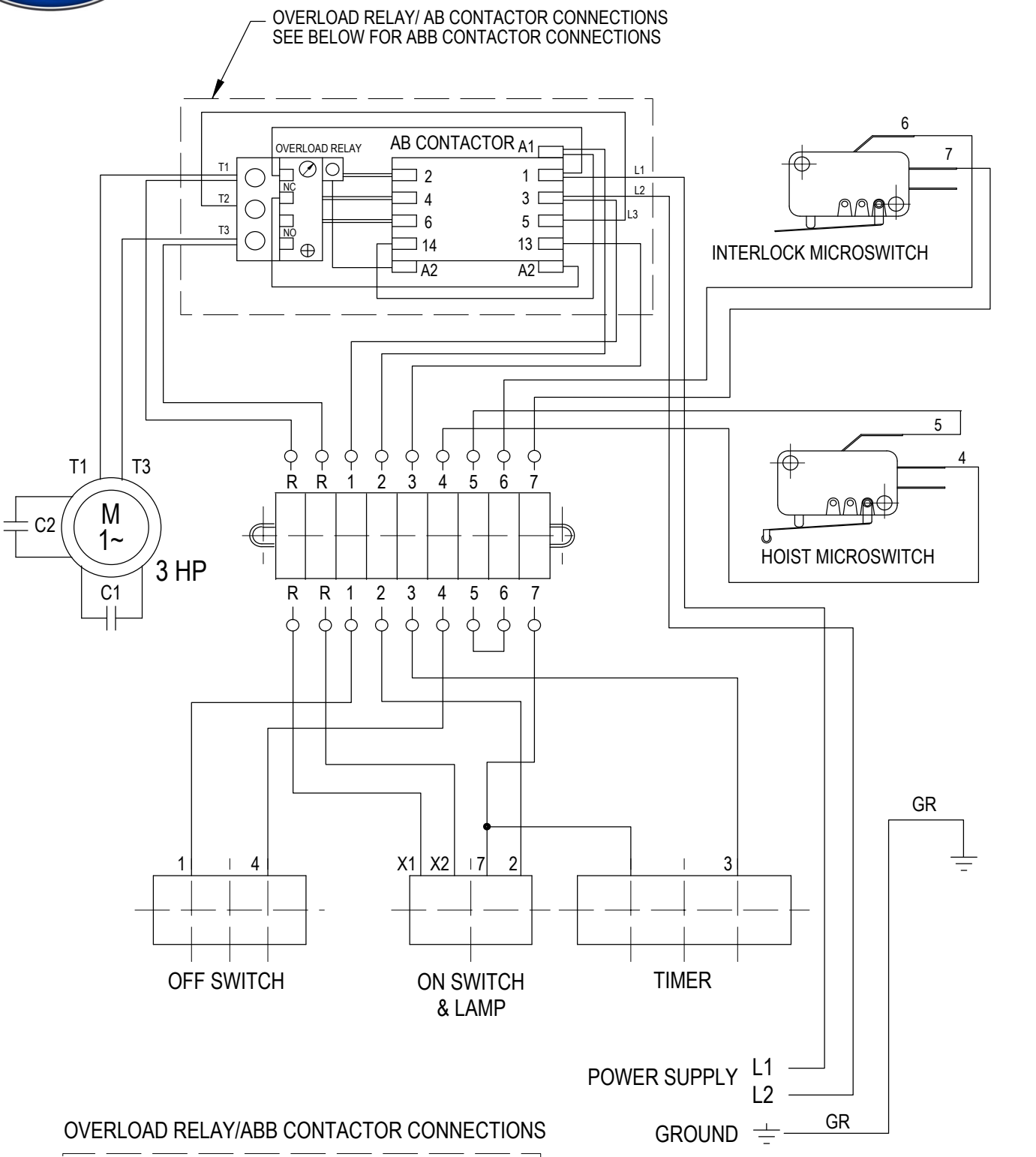

OVERLOAD RELAY/ABB CONTACTOR CONNECTIONS

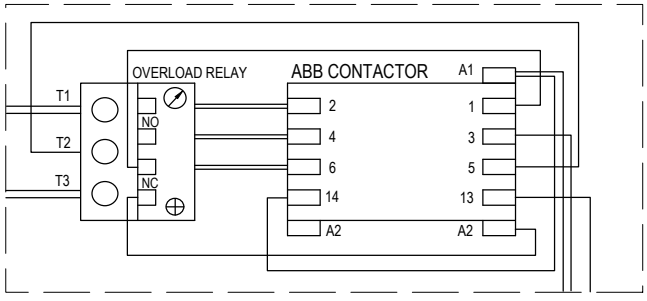

© Globe Food Equipment Company

SP60 208V Three Phase Wiring Diagram

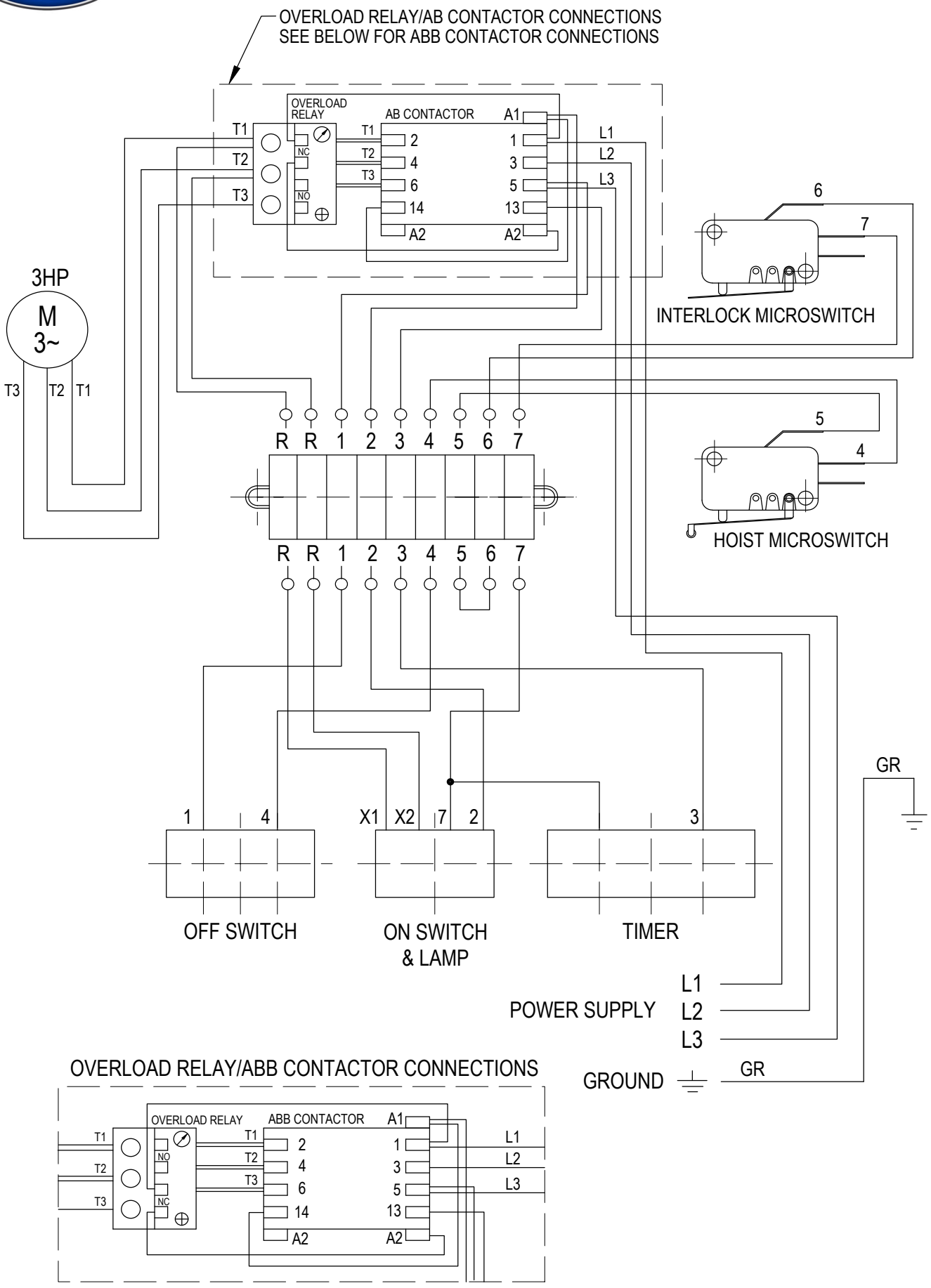

© Globe Food Equipment Company

SP60 208V Three Phase Wiring Diagram

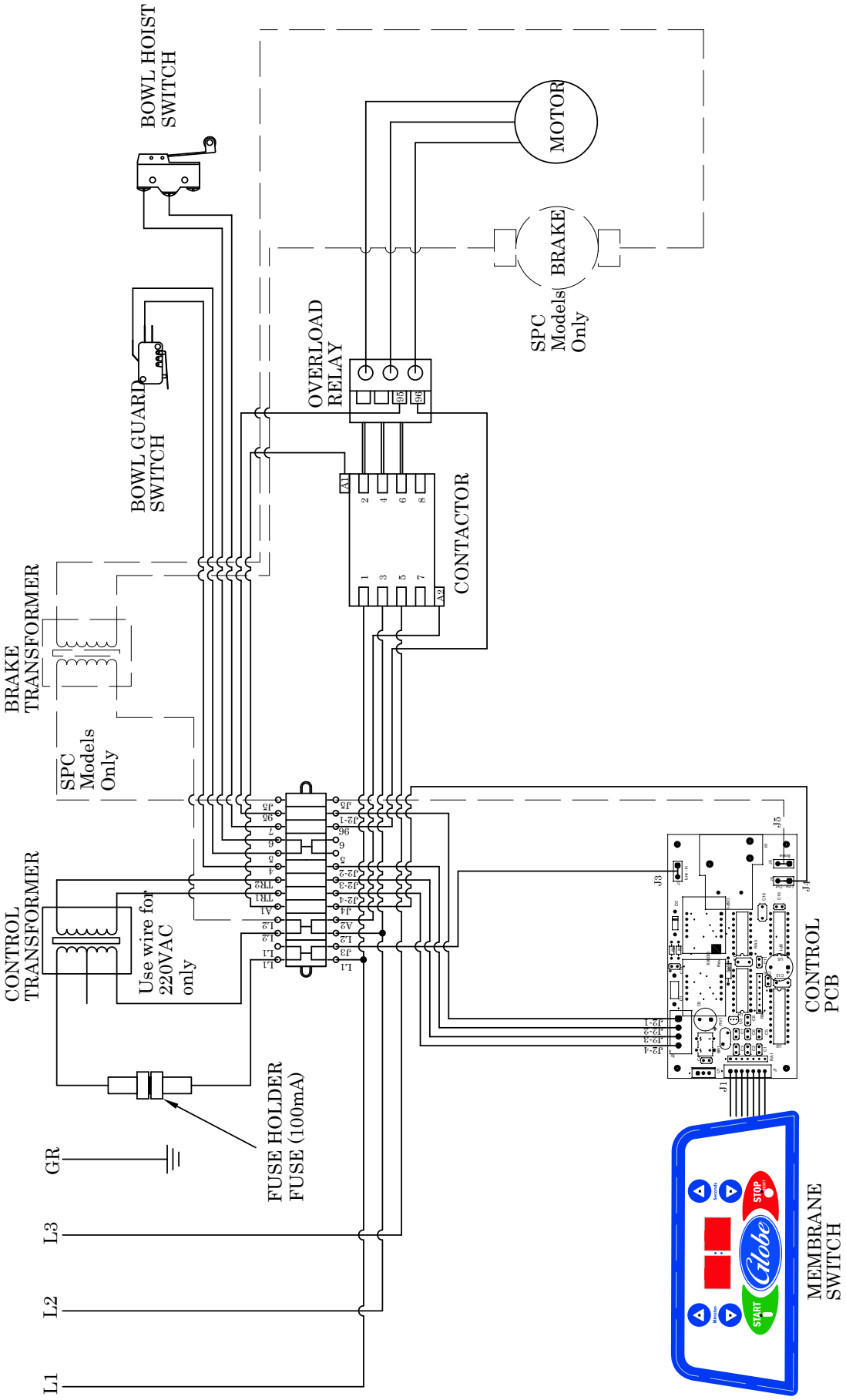

© Globe Food Equipment Company